American Mfg Company
Quality Mud Pumps and Parts

ISO 9001:2008 Registered

Factory/Sales Office

P.O. Box 640
736 19th Avenue NE
St. Joseph, Minnesota 56374

(888) 299-3412 ~ Toll Free
(320) 363-7274 ~ Fax
(320) 363-7273 ~ Phone

info@american-manufacturing.com
www.american-manufacturing.com

AME0413HD Piston Pump Data

6.7 BHP Continuous Duty (8.5 BHP Intermittent Duty)

Specifications	
Pump Model	AME0413HD
Configuration	Vertical Quadruplex Piston
Number of Pistons	4
Stroke Length	1.0 Inches (25.4 mm)
Frame Load Rating	1240 lbs. (562.455 kg)
Pump Weight (Average)	80 lbs. (36.29 kg)
Direction of Rotation	Either
Internal Gear Rotation	1:1
Intermittent Duty Speed Rating	575 RPM
Continuous Duty Speed Rating	450 RPM
Minimum Speed	390 RPM
Mechanical Efficiency	85%
Lubrication System	Splash, Gravity Return
Lube Oil Capacity	1 Quart
Lube Oil Type	SAE 30
Maximum Fluid Temperature	140°F
Minimum Fluid Temperature	0°F
Standard Suction Size	1.25 Inch NPT
Standard Discharge Size	0.75 Inch NPT
Fluid End Material	Cast Iron
Valve Type	Disc Valve

Performance Rating

Pump Model	Diameter		Displacement/ REV		Maximum Pressure		Pump Capacity @ Input Speed (RPM)									
							390 RPM		400 RPM		425 RPM		450 RPM		575 RPM	
	Inch	mm	Gallon	Liter	PSI	kg/cm²	gpm	lpm	gpm	lpm	gpm	lpm	gpm	lpm	gpm	lpm
AME0413HD	1.625	41.27	0.036	0.12	550	38.6	14.01	53	14.36	54.35	15.26	57.77	16.16	61.17	20.65	78.17

Specifications subject to change without notice.

Horsepower is based on 85 or 90% efficiency. Actual application horsepower requirements can be calculated using this equation: BHP = (GPM*PSI)/(1714*0.85 or 0.90) Pump capacities listed are based on 100% volumetric efficiency.

This document contains American Mfg Company proprietary and confidential information. It is loaned for limited purposes only and remains the property of American Mfg Company. It may not be reproduced in whole or part or disclosed to third parties without the prior written consent of American Mfg Company. The document is to be returned to American Mfg Company upon request and in all events upon completion of the use for which it was used.

UKAS QUALITY MANAGEMENT 105

MGMT. SYS. RvA C 118

ANAB ACCREDITED

PERRY JOHNSON REGISTRARS

American Mfg Company
Quality Mud Pumps and Parts

AME0413HD Component Part List

Item #	Component Description	Part #	Qty
1	Power Frame	PPFMC 1273545	1
2	Crankshaft: Driven	PPFMC P509560	1
3	Crankshaft: Drive	PPFMC P510882	1
4	Connecting Rod Assembly	PPFMC P509546	4
5	Bearing Insert (Pair)	PPFMC P510834	4
6	Wrist Pin	PPFMC 1219650	4
7	Crosshead	PPFMC 1216823	4
8	Sleeve	PPFMC 1218743	4
9	Ball Bearing, Single	PPFMC 1104444	3
10	Retainer Ring	PPFMC 1118553	4
11	Seal, Oil	PPFMC 1101095	4
12	Ball Bearing, Double	PPFMC 1104508	1
13	Washer	PPFMC 1177455	12
14	Screw	PPFMC 1100068	12
15	Plug, 1/4" NPT	PPFMC 1101305	1
16	Mounting Base, Pump	PPFMC 1280633	1
17	Gasket, Pump Base	PPFMC 1273559	1
18	Key	PPFMC 1187577	1
19	Plug, 3/4" NPT	PPFMC 1105060	2
20	Screw, Drive	PPAM A100120000	4
21	Nameplate	PPAM A000522000	1

Item #	Component Description	Part #	Qty
22	Fluid Cylinder	PPFMC P500358	1
23	Screw	PPFMC P522316	4
24	Valve Seat, Raised Face	PPFMC 5260142	8
25	Disc & Spring Assembly	PPFMC 5253499	8
26	Valve Cage	PPFMC 1219610	8
27	O-Ring	PPFMC 3264075	12
28	Valve Cover	PPFMC 1219614	4
29	Valve Cover Clamp	PPFMC 1255887	2
30	Screw	PPFMC 1100064	2
31	Plug, 1/4" NPT	PPFMC 1109987	1
32	Screw	PPFMC 1284516	4
33	Piston Retainer	PPFMC 5257986	4
34	Piston Cup	PPFMC 5257807	4
35	O-Ring	PPFMC 1101339	4
36	Piston Holder	PPFMC 1282557	4
37	Gasket	PPFMC A91684	8
38	Ceramic Liner	PPFMC 1241364	4
39	Umbrella (Plastic)	PPFMC 1279148	4
40	Washer, Umbrella	PPFMC 1269388	4
41	Cap Plug For 3/4" NPT	PPFMC 1177200	1
42	Cap Plug For 1-1/4" NPT	PPFMC 1177202	1

American Mfg Company

Quality Mud Pumps and Parts

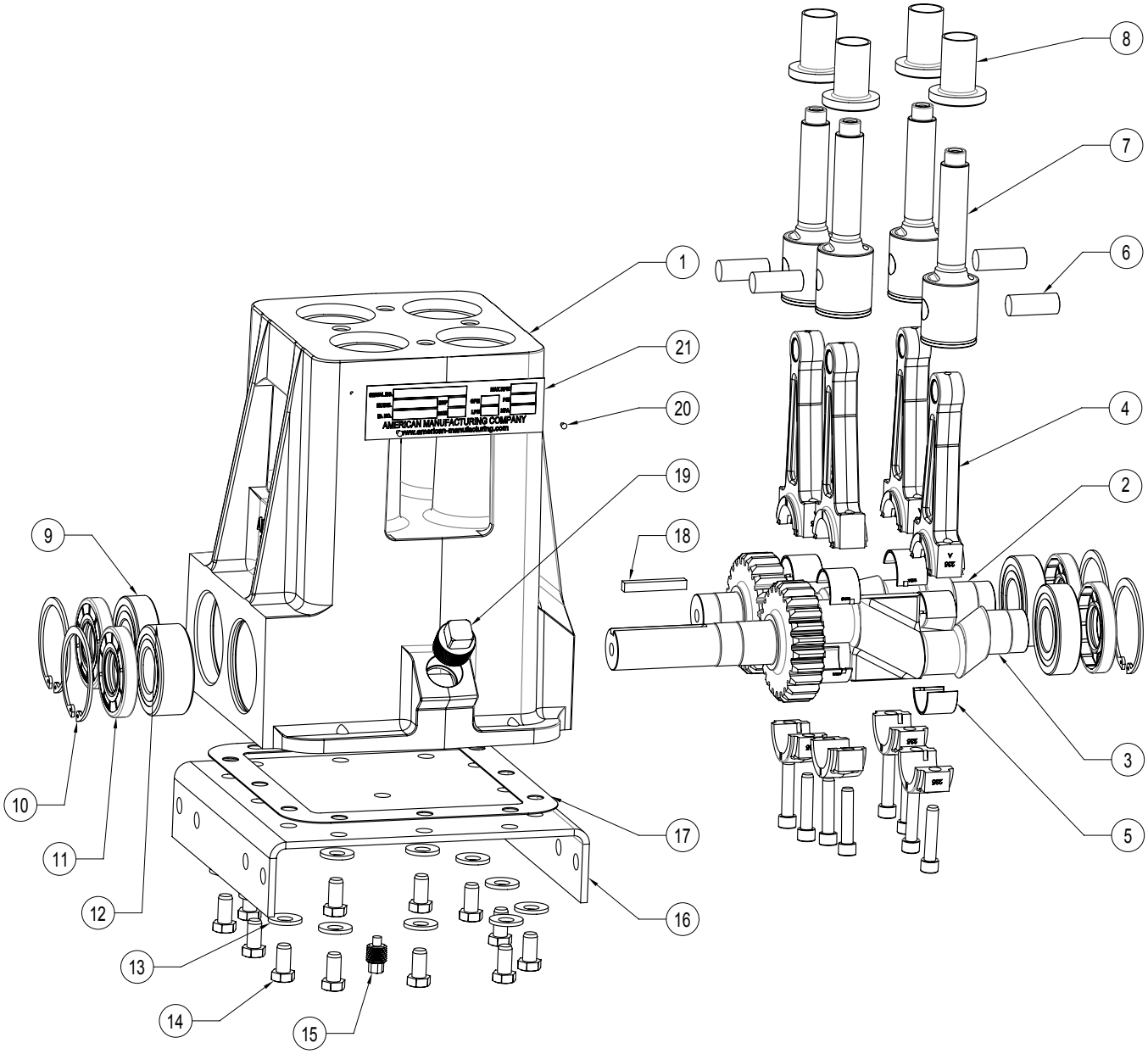

Power End Components

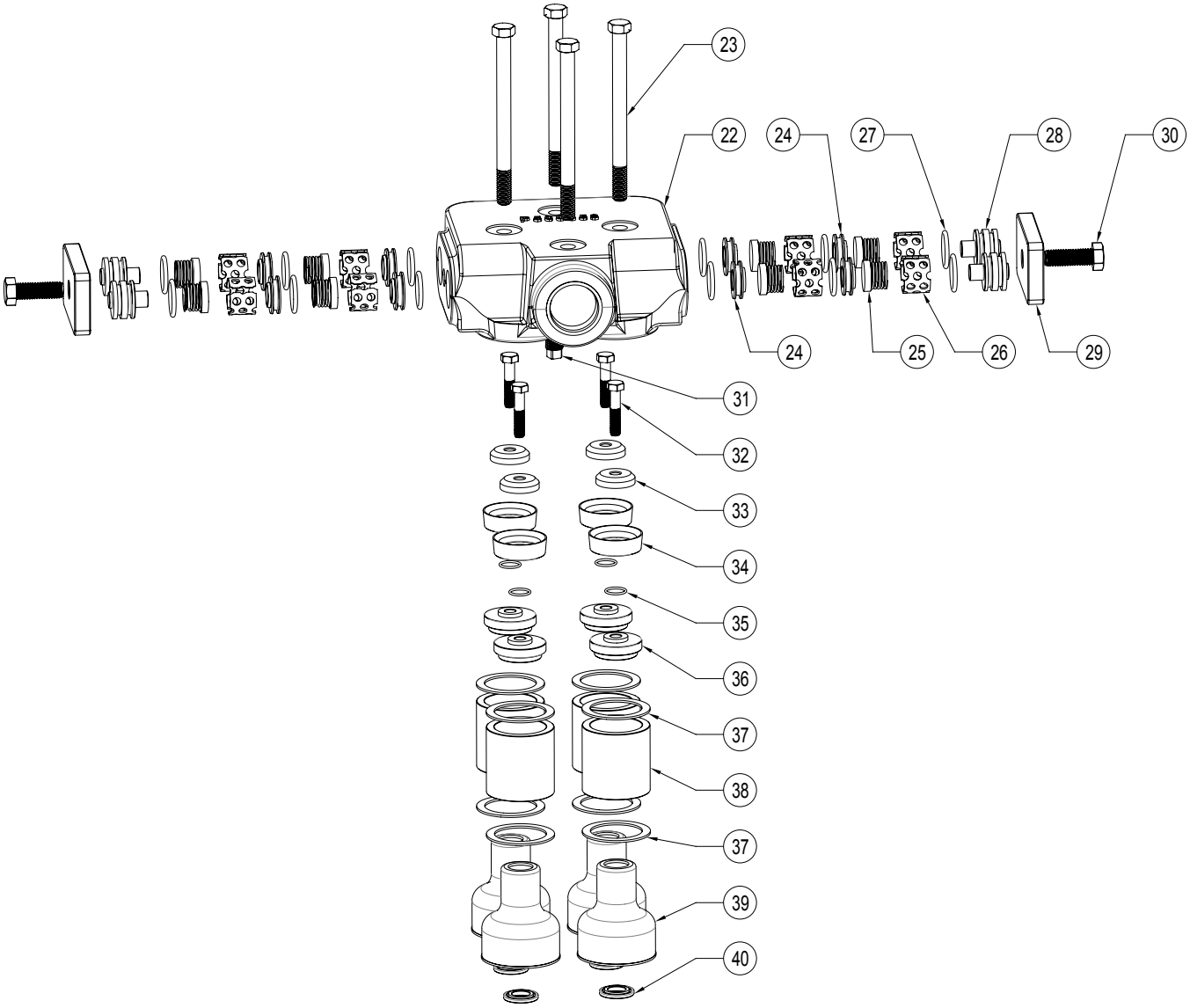

Fluid End Components

American Mfg Company
Quality Mud Pumps and Parts

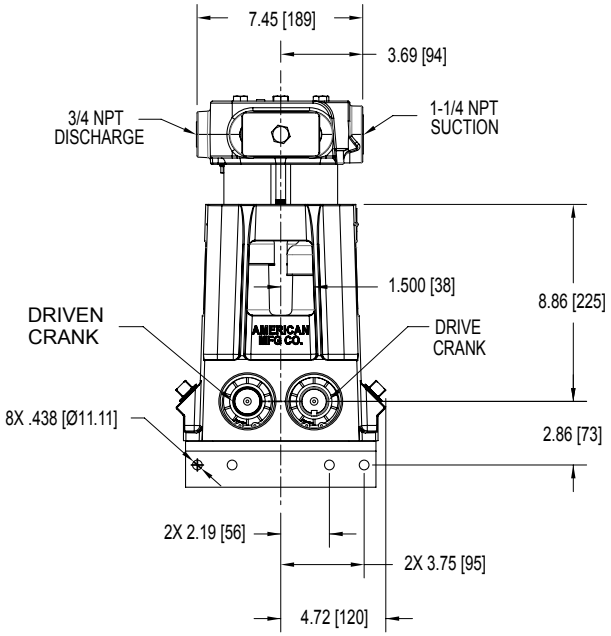

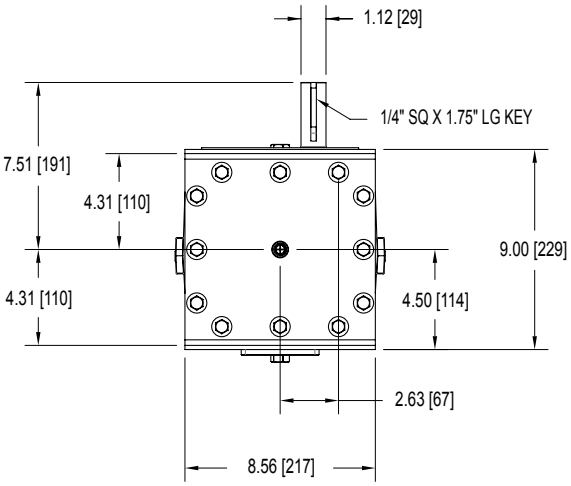

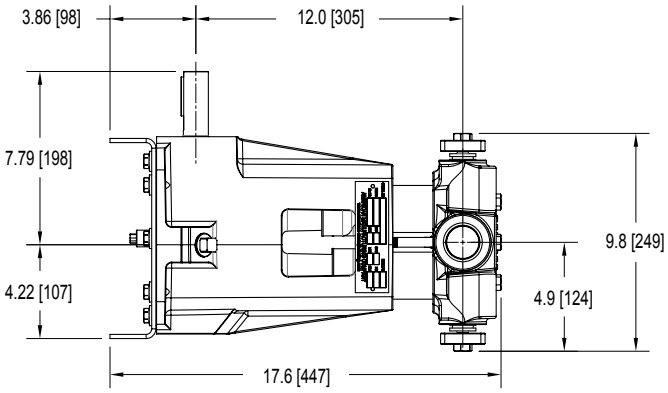

Pump Mounting Dimensions